dahl-ECO **mini-ball**™ Valve

Plumbing

TDS - 600-LF
New June/14

FINISHING VALVE
COMPRESSION x COMPRESSION x AA WATER HAMMER ARRESTER

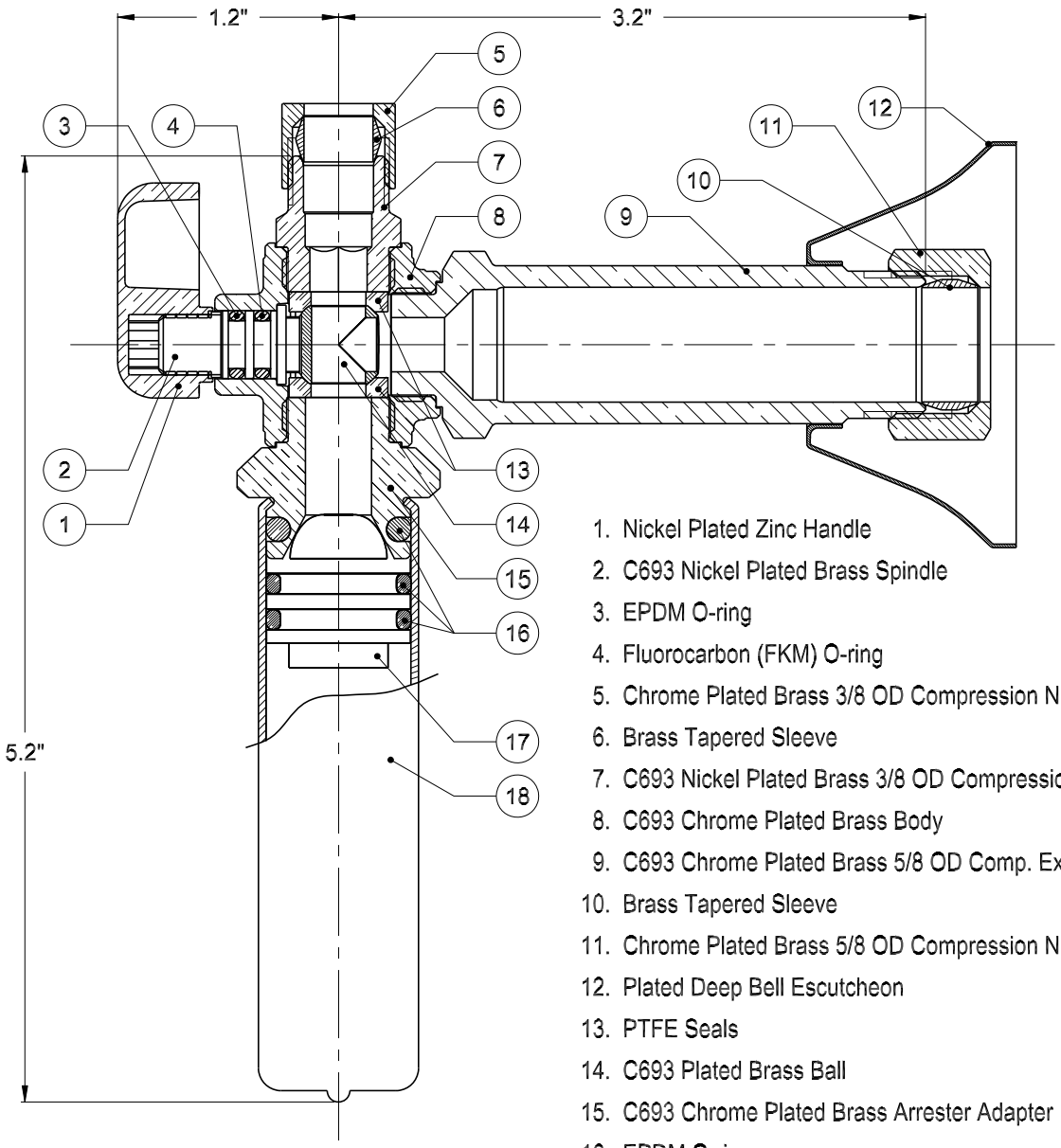

1. Nickel Plated Zinc Handle
2. C693 Nickel Plated Brass Spindle
3. EPDM O-ring
4. Fluorocarbon (FKM) O-ring
5. Chrome Plated Brass 3/8 OD Compression Nut
6. Brass Tapered Sleeve
7. C693 Nickel Plated Brass 3/8 OD Compression End
8. C693 Chrome Plated Brass Body
9. C693 Chrome Plated Brass 5/8 OD Comp. Extension End
10. Brass Tapered Sleeve
11. Chrome Plated Brass 5/8 OD Compression Nut
12. Plated Deep Bell Escutcheon
13. PTFE Seals
14. C693 Plated Brass Ball
15. C693 Chrome Plated Brass Arrester Adapter
16. EPDM O-rings
17. Polypropylene Piston
18. Chrome Plated Copper Barrel

611 - 33LE - 31- 14WHA
5/8 OD Comp. Extension x 3/8 OD Comp. x AA Arrester

Working Pressure: 250 psi / 250°F
depending on pipe material.

, UPC®
NSF / ANSI 61-G

Designed and Manufactured in Canada

AA Sized Water Hammer Arrester - ASSE 1010 Listed
Wetted surface area contains <0.1wt% weighted average lead.

Also available with Screwdriver Slot operation

dahl brothers canada limited
2600 S. SHERIDAN WAY, MISSISSAUGA, ON, CANADA L5J 2M4
905-822-2330 CAN 800-268-5355 U.S. 800-268-2363
FAX(905) 855-1450, USA AND CANADA 800-226-1801
sales@dahlvalve.com www.dahlvalve.com